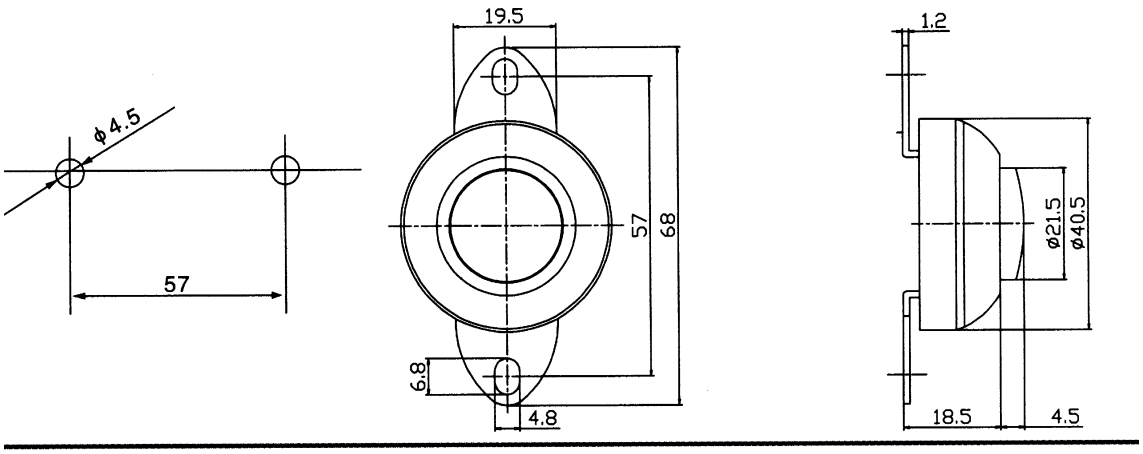
ϕ4.5
57
19.5
57
68
6.8
4.8
1.2
ø21.5
ø40.5
18.5
4.5